SPECTACLE BLIND RTJ
FOSTER WHEELER 57B11.3 JULY 2008

Class 150 RTJ

Diameter (inches)	A	B	C	D	W	I	H	E	F	G	Unit weight
											Kg
1/2"	-	-	-	-	-	-	-	-	-	-	
3/4"	-	-	-	-	-	-	-	-	-	-	
1"	64	32	16	6	106	36	16	47.6	8.7	6.4	0.6
1.1/2"	83	48	16	6	125	36	16	65.1	8.7	6.4	0.9
2"	102	60	18	6	147	39	19	82.6	8.7	6.4	1.6
2.1/2"	-	-	-	-	-	-	-	-	-	-	-
3"	134	89	20	8	187	49	19	114.3	8.7	6.4	3
4"	172	114	22	10	225	49	19	149.2	8.7	6.4	5.9
6"	219	168	24	10	279	52	22	193.7	8.7	6.4	9.5
8"	273	219	28	10	338	52	22	247.7	8.7	6.4	16
10"	330	273	30	10	406	66	26	304.8	8.7	6.4	25.5
12"	407	324	36	10	483	66	26	381	8.7	6.4	47.5
14"	426	356	36	10	518	69	29	396.9	8.7	6.4	50
16"	483	406	40	15	578	69	29	454	8.7	6.4	72
18"	546	457	44	15	629	82	32	517.5	8.7	6.4	101.5
20"	597	508	44	20	686	82	32	558.8	8.7	6.4	123
24"	711	610	52	20	800	85	35	673.1	8.7	6.4	199

Class 900 RTJ

Diameter (inches)	A	B	C	D	W	I	H	E	F	G	Unit weight
											Kg
1/2"	61	19	23	10	83	25	-	39.7	8.7	6.4	1.1
3/4"	67	25	24	11	89	25	-	44.5	8.7	6.4	1.3
1"	72	32	25	12	102	25	-	50.8	8.7	6.4	1.6
1.1/2"	92	48	27	14	124	25	-	68.3	8.7	6.4	2.6
2"	124	60	34	18	165	25	-	95.3	11.9	7.9	5.9
2.1/2"	137	73	32	16	191	25	-	-	-	-	6.6
3"	156	89	34	18	191	25	-	123.8	11.9	7.9	8.7
4"	181	114	38	22	235	25	-				13
6"	241	168	46	30	318	73	29	211.1	11.9	7.9	26
8"	308	219	54	38	394	79	38	269.9	11.9	7.9	49
10"	362	273	61	45	470	121	38	323.9	11.9	7.9	74
12"	419	324	68	52	533	121	38	381	11.9	7.9	107
14"	467	356	80	57	559	121	44	419.1	16.7	11.1	156
16"	524	406	86	64	619	127	48	469.9	16.7	11.1	208
18"	594	457	98	72	686	127	54	533.4	19.8	12.7	304
20"	648	508	105	79	749	127	57	584.2	19.8	12.7	381
24"	711	610	125	93	902	140	70	692.2	27	15.9	639

Class 300 RTJ

Diameter (inches)	A	B	C	D	W	I	H	E	F	G	Unit weight
											Kg
1/2"	51	19	18	6	67	25	-	34.1	7.1	5.6	0.6
3/4"	64	25	20	8	83	25	-	42.9	8.7	6.4	1.0
1"	70	32	21	8	89	25	-	50.8	8.7	6.4	1.2
1.1/2"	91	48	24	11	114	25	-	68.3	8.7	6.4	2.2
2"	108	60	27	11	127	25	-	82.6	11.9	7.9	3.4
2.1/2"	127	73	26	10	149	25	-	-	-	-	4.3
3"	146	89	27	12	168	25	-	123.8	11.9	7.9	5.9
4"	175	114	29	14	200	25	-	149.2	11.9	7.9	8.8
6"	241	168	34	18	270	90	22	211.1	11.9	7.9	19
8"	302	219	38	23	330	90	25	269.9	11.9	7.9	32
10"	356	273	42	27	387	100	29	323.9	11.9	7.9	47
12"	413	324	47	31	451	100	32	381	11.9	7.9	70
14"	457	356	50	34	514	120	35	419.1	11.9	7.9	92
16"	508	486	54	38	572	120	38	469.9	11.9	7.9	120
18"	575	457	58	42	629	120	38	533.4	11.9	7.9	164
20"	635	508	65	46	686	120	38	584.2	13.5	9.5	222
24"	749	610	77	54	813	140	44	692.2	16.7	11.1	360

Class 1500 RTJ

Diameter (inches)	A	B	C	D	W	I	H	E	F	G	Unit weight
											Kg
1/2"	61	19	23	10	83	25	-	39.7	8.7	6.4	1.1
3/4"	67	25	24	11	89	25	-	44.5	8.7	6.4	1.3
1"	72	32	25	12	102	25	-	50.8	8.7	6.4	1.6
1.1/2"	92	48	27	14	124	25	-	68.3	8.7	6.4	2.6
2"	124	60	34	18	165	25	-	95.3	11.9	7.9	5.9
2.1/2"	137	73	36	20	191	25	-	-	-	-	7.4
3"	168	89	41	25	203	25	-	136.5	11.9	7.9	13
4"	194	114	49	30	241	79	35	161.9	11.9	7.9	20
6"	248	168	57	38	318	79	38	211.1	13.5	9.5	35
8"	318	219	70	48	394	86	44	269.9	16.7	11.1	68
10"	371	273	80	57	483	133	51	323.9	16.7	11.1	104
12"	438	324	96	67	572	133	54	381	23	14.3	171
14"	489	356	105	73	635	140	64	419.1	27	15.9	234
16"	546	406	117	82	705	146	70	469.9	30.2	17.5	319
18"	613	457	128	93	775	152	76	533.4	30.2	17.5	438
20"	673	508	137	101	832	165	83	584.2	33.3	17.5	558
24"	794	610	161	120	991	178	95	692.2	36.5	20.6	898

Class 600 RTJ

Diameter (inches)	A	B	C	D	W	I	H	E	F	G	Unit weight
											Kg
1/2"	51	19	18	6	67	25	-	34.1	7.1	5.6	0.6
3/4"	64	25	20	8	83	25	-	42.9	8.7	6.4	1.0
1"	70	32	21	8	89	25	-	50.8	8.7	6.4	1.2
1.1/2"	91	48	24	11	114	25	-	68.3	8.7	6.4	2.2
2"	108	60	27	11	127	25	-	82.6	11.9	7.9	3.4
2.1/2"	127	73	29	13	149	25	-				4.9
3"	146	89	31	15	168	25	-	123.8	11.9	7.9	6.8
4"	175	114	34	18	216	25	-				11
6"	241	168	41	25	292	86	29	211.1	11.9	7.9	23
8"	302	219	47	31	349	95	32	269.9	11.9	7.9	40
10"	356	273	53	37	432	105	35	323.9	11.9	7.9	60
12"	413	324	59	43	469	105	35	381	11.9	7.9	88
14"	457	356	63	47	527	114	41	419.1	11.9	7.9	115
16"	508	406	68	52	603	124	44	469.9	11.9	7.9	151
18"	575	457	75	59	654	133	48	533.4	11.9	7.9	213
20"	635	508	84	65	724	133	48	584.2	13.5	9.5	288
24"	749	610	99	76	838	152	54	692.2	16.7	11.1	463

Class 2500 RTJ

Diameter (inches)	A	B	C	D	W	I	H	E	F	G	Unit weight
											Kg
1/2"	65	19	24	6	119	42	22	42.9	8.7	6.4	0.6
3/4"	73	25	26	8	126	42	22	50.8	8.7	6.4	1.0
1"	83	32	28	8	141	46	26	60.3	8.7	6.4	1.2
1.1/2"	115	48	36	8	184	52	32	82.6	11.9	7.9	2.2
2"	134	60	44	10	209	58.5	29	101.6	11.9	7.9	3.4
2.1/2"	-	-	-	-	-	-	-	-	-	-	-
3"	169	89	52	15	262	65	35	127	13.5	9.5	6.8
4"	203	114	62	20	304	71	41	157.2	16.7	11.1	11
6"	280	168	84	20	411	84	54	228.6	19.8	12.7	23
8"	340	219	100	25	484	94	54	279.4	23	0.6	40
10"	426	273	124	25	587	107	67	342.9	30.2	17.5	60
12"	496	324	140	30	667	123	73	406.4	33.3	17.5	60
14"	NOT FORECAST BY STANDARD										
16"											
18"											
20"											
24"											

Notes:
1) All weights are estimated.
2) Dimensions are in mm.
3) Spectacle blinds may be fabricated either in one piece or two pieces joined by weld.
4) Dimensions of RTJ groove to be in accordance with AINSI B16.5

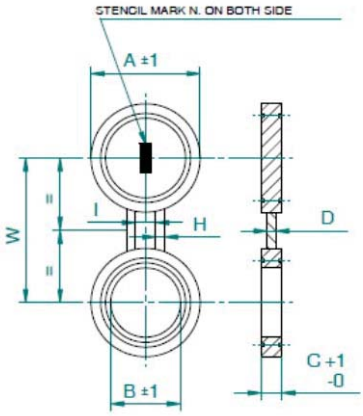

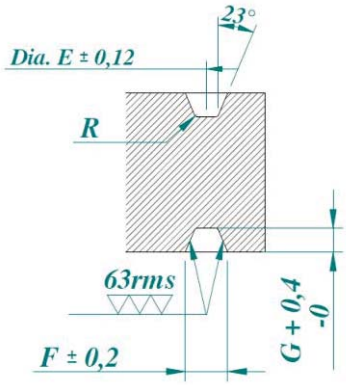

La Meccanica Padana SRL

La Meccanica Padana Srl - Via RISCASSI 1/A - 29010 San Nicolo` (PIACENZA) - ITALY - www.meccanicapadana.com
Tel: 0039-0523-762020(4 lines) - Fax: 0039-0523-762016 / 762856 / 760302 - meccanica@meccanicapadana.com